Guide Roller Set

SWING TYPE

CAD FILE

*This illustration shows R Type GRASR.

GRASR
GRASL

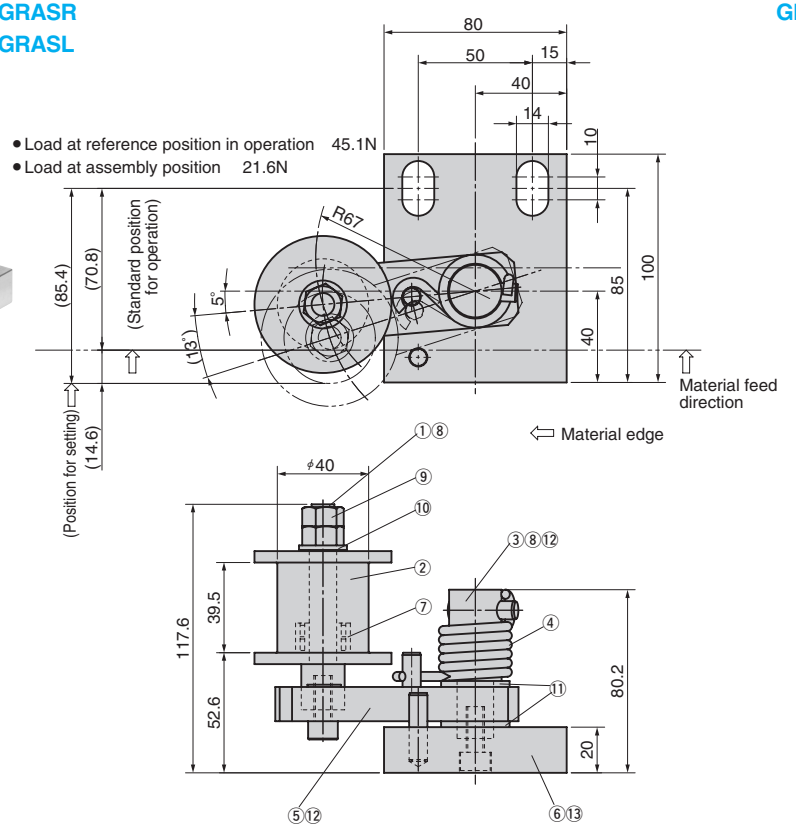

GRBS

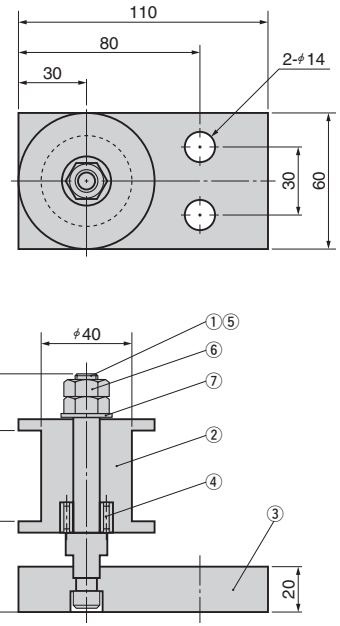

■GRASR (L) Table of Components

No.	Description	Qty	Material and Remark
①	Roller Set Pin	1	S45C HRC20 to 30
②	Guide Roller	1	SK5 HRC55 to 60
③	Arm Set Pin	1	SS400
④	Spring	1	SWP－B
⑤	Roller Arm	1	SS400
⑥	Roller Base	1	SS400
⑦	Needle Bearing	1	NAG4901 by IKO
⑧	Hexagon Socket Head Bolt	2	SCM435 M8×20
⑨	Hexagon Nut	2	M10
⑩	Washer	1	For M10
⑪	Washer	2	For M16
⑫	Dowel Pin	2	φ8×30
⑬	Doewl Pin Female Thread	1	φ8×30

■GRBS Table of Components

No.	Description	Qty	Material and Remark
①	Roller Set Pin	1	S45C HRC20 to 30
②	Guide Roller	1	SK5 HRC55 to 60
③	Roller Base	1	SS400
④	Needle Bearing	1	NAG4901 by IKO
⑤	Hexagon Socket Head Bolt	1	SCM435 M8×20
⑥	Hexagon Nut	2	For M10
⑦	Washer	1	For M10

Order

Catalog No.
GRASR

Example

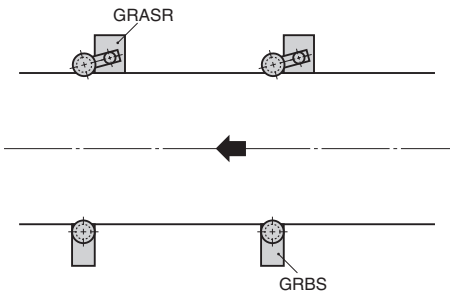

Blanking Die Components

Copyright © Sankyo Oilless Industry, Inc. All Rights Reserved.

Copyright © Sankyo Oilless Industry, Inc. All Rights Reserved.